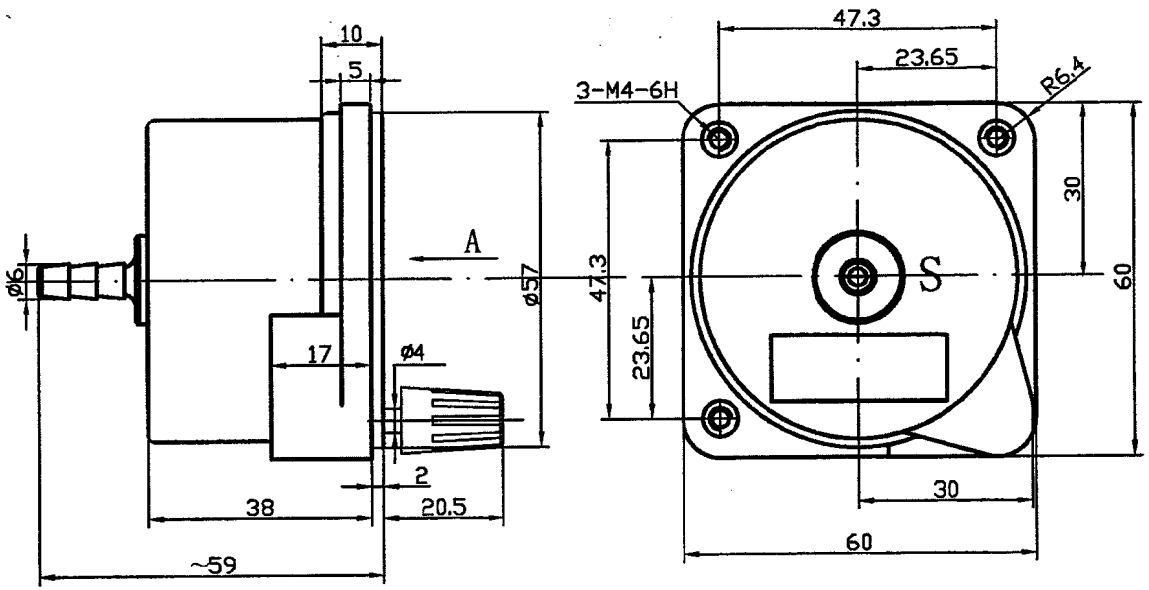

Direction A

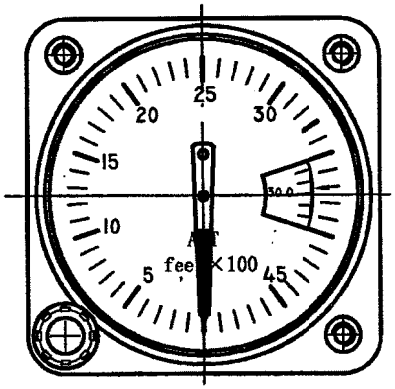

Note: Size unit mm

Falcongauge

Altn6inf-2 2 1/4" Sensitive Altimeter 5,500 ft.

Wultrad, Inc. www.falcongauge.com